MAXLUX LED
for greener generations.

MS SIRIM

BRENNA LED LAMP BULB

DAYLIGHT / 6500K | COOL WHITE / 4000K | WARM WHITE / 3000K

GREEN ENERGY

Low Heat Emission, Eco-friendly And Safe For Eyes.

LONG LIFE

Long-life And Energy Saving Alternative To Incandescent Bulbs.

HIGH LUMEN EFFICIENCY

High Quality SMD 2835 LED Chips.

LED Specification

Model	Power Watt	Base	CCT	Lumen (lm)	Power Factor	Voltage	CRI	Beam Angle	Lamp Type
G45	3W	B22	3000K	280LM	0.5	100~240V ~50/60Hz	≥ 80	200°	LED 2835
G45	3W	E27	3000K	280LM					
G45	5W	E27	6500K / 3000K	500LM / 450LM					
A60	10W	E27	6500K / 4000K / 3000K	880LM / 880LM / 830LM					
A65	12W	E27	6500K / 4000K / 3000K	1100LM / 1100LM /1050LM					
A70	15W	E27	6500K / 4000K / 3000K	1400LM / 1400LM / 1350LM					

**SIRIM is only applicable to E27 base.*

Dimensions (mm) (LxH)	
G45 3W LED BULB	45mm x 85mm
G45 5W LED BULB	45mm x 85mm
A60 10W LED BULB	60mm x 112mm
A65 12W LED BULB	65mm x 124mm
A70 15W LED BULB	70mm x 138mm

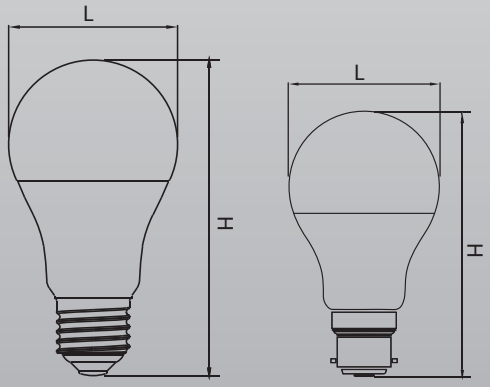

ISO 9001:2015 | CE | RoHS | Ra >80 | CB | 200° | 100~240V 50/60Hz | 0.5 PF | MS SIRIM